Solenoid Valve, Servo-Assisted, 0.5 – 10.0 bar

Type 6211

General Purpose

2/2-Way; G 1/4" – 1"; PN 0.5 – 10.0 bar

Advantages/Benefits

- **Low power consumption, no relay necessary when used on a PLC**
- **Medium is separated from the actuator system**
- **Compact size**
- **Low weight**
- **Easy On/Off Control System Module**

Design/Function

Type 6211 is a servo-assisted 2/2-way solenoid valve with a separating servo diaphragm.
It is based on a modular concept with push-over coil and standard cable plug.
The valve is normally closed by spring force. Energized, the solenoid opens the pilot valve first. Then the medium pressure opens the valve against the pressure drop above the diaphragm.

Optimised point-to-point connection between Burkert-Sensors and Actuators

Ability of communication with conventional controlling or Fieldbus connections

Applications

Fluids

- Neutral fluids, e.g. air, gas, water and oils
- Oil and fat free liquids, e.g. hot water up to 70°C, alkaline washing and bleaching lyes
- Hot air, per-solutions, hot oils and oils with additives

Applications

- General purpose applications
- On/Off control in process systems
- Water and sewage treatment
- Public hygiene
- Medical service
- Fine chemical industry

bürkert
Easy Fluid Control Systems

Solenoid Valve, Servo-Assisted, 0.5 – 10.0 bar **Type 6211**

General Purpose

Technical Data Type 6211

Circuit function **Symbol**

A 2/2-way, normally closed, with 2-way pilot control and coupled solenoid system

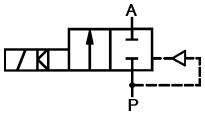

Operating Data (Valve)

Pressure range	0.5 – 10.0 bar
Port connection	G 1/4" - G 1"
Fluid	
NBR sealing	Neutral fluids, e.g. water, compressed air, town gas, natural gas, hydraulic and other oils
EPDM sealing	Oil- and fat-free liquids, e.g. hot water, alkaline washing and bleaching lyes
FPM sealing	Hot air, per-solutions, oxygene, hot oils and oils with additives
Medium temperature	
NBR sealing	0° up to +70°C
EPDM sealing	-10° up to +70°C
FPM sealing	0° up to +70°C
Max. ambient temperature	+55° C
Max. viscosity	21 mm^2/s
Flow rate (Kv value water) [m^3/h]	Measured at +20°C, 1 bar pressure at valve inlet port and open outlet port
Pressure rate [bar]	Overpressure to atmospheric pressure
Response times [ms]	Measured at +20°C, 6 bar pressure at outlet port
Opening pressure raise	0% to 90%
Closing pressure drop	100% to 10%
Installation	as required, but preferably with solenoid system upright

Operating Data (Actuator)

Operating voltages		
DC	24 V	
AC	24, 110, 230 V/50 Hz	
Voltages tolerance	±10 %	
Power consumption	DC	AC
Inrush	4 W	9 VA
Hold	4 W	6 VA
Duty cycle	100% continuously rated	
Cycling rate	up to 15 c.p.m.	
Electr. connection	Tag connectors sidewards acc. to DIN 43650, Form C	
Cable plugs		
Standard delivery	With type 2506, 0 – 250 V (others, please see accessories)	
EaseOn technology	Type 2510	

Materials

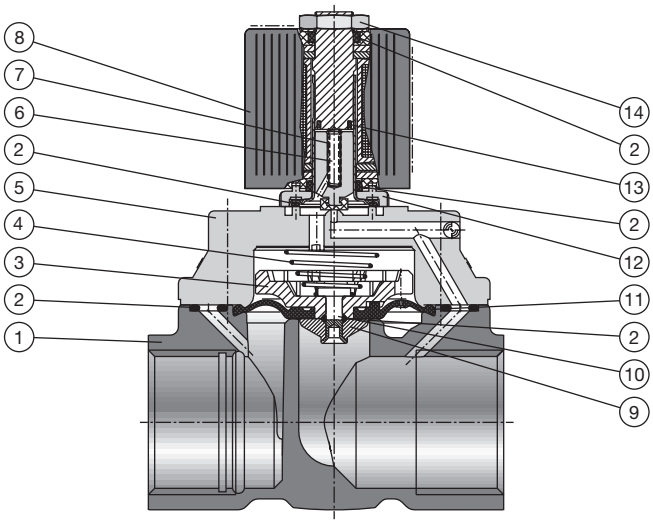

1	Valve body:	Brass
2	O-rings:	NBR, FPM and EPDM
3	Diaphragm support:	PPS
4	Spring:	SS 1.4310
5	Cover:	Noryl
6	Plunger:	SS 1.4105
7	Spring	SS 1.4310
8	Coil:	PA
9	Diaphragm holder:	Brass
10	Bolt	SS 1.4401
11	Diaphragm:	NBR, FPM and EPDM
12	Flange:	Zn3glcC (surface)
13	Shading rings:	Cu
14	Locknut:	9SMnPb 28K (surface Zn5glcA)

Specifications - Ordering Chart (Other Versions on Request)

With Standard Cable Plug Type 2506

Seal Material NBR, Temperature Range 0° up to +70°C, Pressure Range 0.5 up to 10.0 bar

Circuit Function	Orifice DN [mm]	Port Connection [inch]	Kv-Value [m³/h]	Response Times Opening [ms]	Response Times Closing [ms]	Weight [kg]	Item-No. Voltage 24V/DC	24 V/50Hz	110 V/50Hz	230V/50Hz
A	10	G 1/4	1.9	20	130	0.31	143 306 C	143 307 D	143 308 N	143 309 P
	10	G 3/8	1.9	20	130	0.31	140 843 F	140 844 G	140 845 H	140 846 A
	10	G 1/2	1.9	20	130	0.31	140 847 B	140 848 L	140 849 M	140 850 J
	13	G 1/2	3.6	30	240	0.44	140 867 F	140 868 Q	140 869 R	140 870 N
	13	G 3/4	3.6	30	240	0.44	140 871 B	140 872 C	140 873 D	140 874 E
	20	G 3/4	8.3	350	600	1.03	140 891 Y	140 892 Z	140 893 S	140 894 T
	20	G 1	8.3	350	600	1.03	140 895 U	140 896 V	140 897 W	140 898 F

With Standard Cable Plug Type 2506

Seal Material FPM, Temperature Range 0° up to +70°C, Pressure Range 0.5 up to 10.0 bar

Circuit Function	Orifice DN [mm]	Port Connection [inch]	Kv-Value [m³/h]	Response Times Opening [ms]	Response Times Closing [ms]	Weight [kg]	Item-No. Voltage 24V/DC	24V/50Hz	110V/50Hz	230V/50Hz
A	10	G 1/4	1.9	20	130	0.31	143 310 B	143 311 Y	143 312 Z	143 313 S
	10	G 3/8	1.9	20	130	0.31	140 851 F	140 852 G	140 853 H	140 854 A
	10	G 1/2	1.9	20	130	0.31	140 855 B	140 856 C	140 857 D	140 858 N
	13	G 1/2	3.6	30	240	0.44	140 875 F	140 876 G	140 877 H	140 878 J
	13	G 3/4	3.6	30	240	0.44	140 879 K	140 880 H	140 881 W	140 882 X
	20	G 3/4	8.3	350	600	1.03	140 899 G	140 900 M	140 901 A	140 902 B
	20	G 1	8.3	350	600	1.03	140 903 C	140 904 D	140 905 E	140 906 F

With Standard Cable Plug Type 2506

Seal Material EPDM, Temperature Range -10° up to +70°C, Pressure Range 0.5 up to 10.0 bar

Circuit Function	Orifice DN [mm]	Port Connection [inch]	Kv-Value [m³/h]	Response Times Opening [ms]	Response Times Closing [ms]	Weight [kg]	Item-No. Voltage 24V/DC	24V/50Hz	110V/50Hz	230V/50Hz
A	10	G 1/4	1.9	20	130	0.31	143 302 G	143 303 H	143 304 A	143 305 B
	10	G 3/8	1.9	20	130	0.31	140 835 X	140 836 Y	140 837 Z	140 838 A
	10	G 1/2	1.9	20	130	0.31	140 839 B	140 840 Q	140 841 D	140 842 E
	13	G 1/2	3.6	30	240	0.44	140 859 P	140 860 L	140 861 H	140 862 A
	13	G 3/4	3.6	30	240	0.44	140 863 B	140 864 C	140 865 D	140 866 E
	20	G 3/4	8.3	350	600	1.03	140 883 Y	140 884 Z	140 885 S	140 886 T
	20	G 1	8.3	350	600	1.03	140 887 U	140 888 D	140 889 E	140 890 B

With Flying Leads

Seal Material NBR, Temperature Range 0° up to +70°C, Pressure Range 0.5 up to 10.0 bar

Circuit Function	Orifice DN [mm]	Port Connection [inch]	Kv-Value [m³/h]	Response Times Opening [ms]	Response Times Closing [ms]	Weight [kg]	Item-No. Voltage 24V/DC	24V/50Hz	110V/50Hz	230V/50Hz
A	10	G 1/4	1.9	20	130	0.31	143 806 S	143 807 T	143 808 C	143 809 D
	10	G 3/8	1.9	20	130	0.31	143 810 Z	143 811 N	143 812 P	143 813 Q
	10	G 1/2	1.9	20	130	0.31	143 814 R	143 815 J	143 816 K	143 817 L
	13	G 1/2	3.6	30	240	0.44	143 818 V	143 819 W	143 820 T	143 821 Q
	13	G 3/4	3.6	30	240	0.44	143 822 R	143 823 J	143 824 K	143 825 L
	20	G 3/4	8.3	350	600	1.03	143 827 N	143 828 X	143 829 Y	143 830 V
	20	G 1	8.3	350	600	1.03	143 831 J	143 832 K	143 833 L	143 834 M

Dimensions [mm]

Type 6211 with Standard Cable Plug
(also available with Flying Leads)

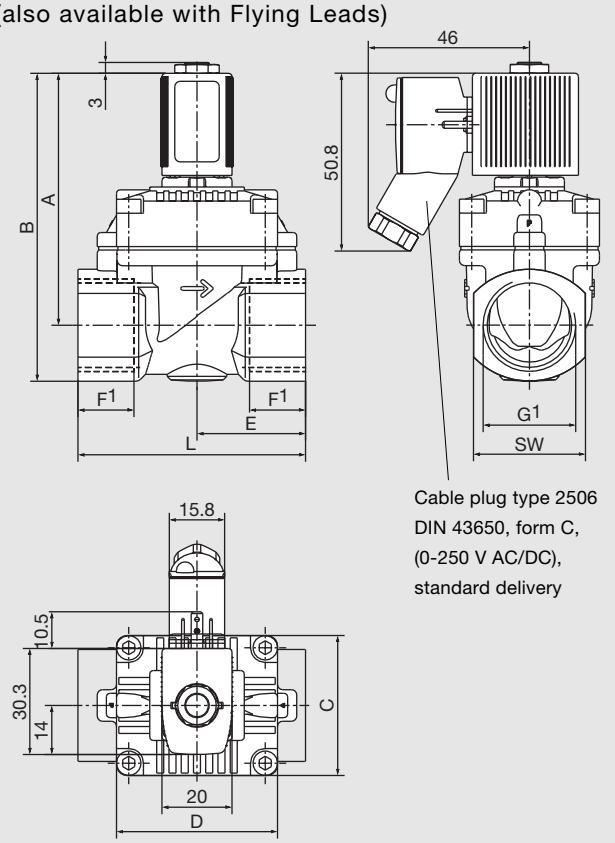

Cable plug type 2506
DIN 43650, form C,
(0-250 V AC/DC),
standard delivery

Cable Plug Type 2506

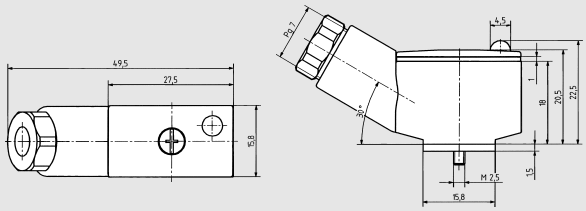

Cable Plug Type 2510 (EaseOn Technology)

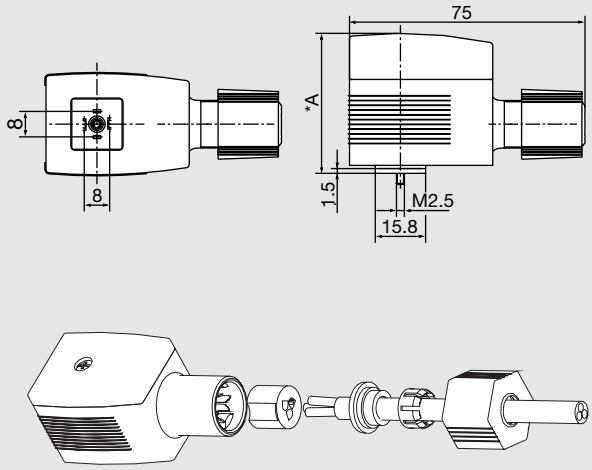

Orifice DN [mm]	G[1] Port Connection [inch]	F[1] Thread Depth [mm]	A [mm]	B [mm]	C [mm]	D [mm]	E [mm]	L [mm]	SW [mm]
		Measurements							
10	G 1/4	12.0	67.5	81.5	32.0	32.0	25.0	55.0	27.0
10	G 3/8	12.0	67.5	81.5	32.0	32.0	25.0	55.0	27.0
10	G 1/2	14.0	67.5	81.5	32.0	32.0	25.0	55.0	27.0
13	G 1/2	14.0	72.0	88.0	40.0	46.0	31.0	65.0	32.0
13	G 3/4	16.0	72.0	88.0	40.0	46.0	31.0	65.0	32.0
20	G 3/4	16.0	81.0	101.5	60.0	60.0	50.0	100.0	41.0
20	G 1	18.0	81.0	101.5	60.0	60.0	50.0	100.0	41.0

Ordering Chart for Accessories

A wide selection of further cable plugs is available (see special data sheets type 2506 and 2510)